23009

MCALISTER MEADOWS

A Subdivision located in the N.E. 1/4 of Sec. 21, T.36S., R.1W., W.M. White City Jackson County, Oregon (File No. 439-18-00065-SUB)

****** APPROVALS ******

File No. 439-18-00065-SUB.
EXAMINED AND APPROVED by the Jackson County Department of Planning and Development this 3rd day of February, 20 20.

Attest: [signature]

EXAMINED AND APPROVED this 31st day of January, 20 20.

[signature]
County Surveyor

EXAMINED AND APPROVED this 28th day of January, 20 20.

[signature]
County Engineer

EXAMINED AND APPROVED this 28th day of January, 20 20.

[signature]
District Engineer
Rogue Valley Sewer Services

EXAMINED AND APPROVED as required by ORS 92.100 (d) and Oregon Laws 2015 Chapter 96 as of FEB 5th, 20 20.

[signature], AGENT
Assessor, Department of Assessment

ALL TAXES, FEES, ASSESSMENTS AND OTHER CHARGES as required by ORS 92.095 have been paid as of Feb. 5th, 2020.

[signature], Deputy
Tax Collector

**** DECLARATION ****

Know all men by these presents that MARK A. MCALISTER (A.K.A. MARK MCALISTER), is the owner in fee of the lands shown on Sheet 2, more particularly described in the Surveyor's Certificate and has subdivided the same into the Lots and Streets as shown on Sheet 2 and (1) does hereby dedicate to the public for public use under the jurisdiction of Jackson County, the Street Right of Way together with the Public Utility Easements (PUE) and (2) does hereby grant to Jackson County in fee the Street Plugs (1SP) with the condition that upon approved dedication of the extension of Anthem Avenue, Taps Lane or Cadence Lane the applicable Street Plug shall automatically be extinguished and dedicated as street right of way and (3) does hereby make and establish the Private Storm Drainage Easements (PSDE), the Private Road & Utility Easement (PRE) and Temporary Vehicular Turnaround Easement (TTE) as shown on Sheet 2. Upon the extension of the affected street the TTE fronting on said street shall automatically terminate and (4) does hereby designate said Subdivision as MCALISTER MEADOWS.

[signature]
MARK A. MCALISTER
A.K.A. MARK MCALISTER

STATE OF OREGON)
)ss
COUNTY OF JACKSON)

PERSONALLY appeared the above named Mark A. McAlister and acknowledged the foregoing instrument to be his voluntary act and deed.

Dated this 28 day of January, 2020.

[signature]
Jennifer N. Ludy Notary Public – Oregon

Commission No. 964112A

My Commission Expires July 5, 2021

*** AFFIDAVIT OF CONSENT ***

FROM DAVID HIBBARD AND ANGELA HIBBARD: DOC. #2020-004800 ORJCO.

361W21AA TL'S 2600 & 2700

SURVEY FOR:

MARK MCALISTER
5966 DARK HOLLOW RD.
MEDFORD, OR 97501

DATE:

JANUARY 18, 2020

SURVEY BY:

L.J. FRIAR & ASSOCIATES, P.C.
CONSULTING LAND SURVEYORS
PO BOX 1947
PHOENIX, OR 97535
PHONE: (541) 772-2782
LJFRIARANDASSOCIATES@CHARTER.NET
WWW.LJFRIARANDASSOCIATES.COM

I HEREBY DECLARE THAT THIS IS AN EXACT COPY OF THE ORIGINAL PLAT.

[signature]
JAMES, E. HIBBS, PLS2234

THIS PLAT WAS PREPARED USING AN EPSON SC-T5200 WITH EPSON T6925 INK ON CONTINENTAL JPC4M2 POLYESTER FILM.

***** RECORDER'S CERTIFICATE *****

Filed for record this 13th day of February, 20 20 at 1:55 o'clock P.M., and recorded in Volume 46 of Plats at Page 01 of the records of Jackson County, Oregon and recorded as Document No. 2020-004799, Official Records of Jackson County, Oregon.

Christine D. Walker
County Clerk

Naiobi Foote
Deputy

Declaration of Covenants, Conditions and Restrictions recorded as Document No. 2020-004801, Official Records of Jackson County, Oregon.

PRIVATE ROAD AGREEMENT = 2020-004802, ORJCO

****** SURVEYOR'S CERTIFICATE ******

I, JAMES E. HIBBS, A REGISTERED LAND SURVEYOR OF THE STATE OF OREGON, HEREBY CERTIFY THAT I HAVE CORRECTLY SURVEYED AND MARKED WITH PROPER MONUMENTS AS PROVIDED BY LAW THE TRACT OF LAND SHOWN HEREON, SAID PLAT BEING AN ACCURATE REPRESENTATION OF THE SAME AND THAT THE FOLLOWING IS AN ACCURATE DESCRIPTION OF THE EXTERIOR BOUNDARY LINES:

Commencing at the Northeast corner of Lot 56 of WHITE MOUNTAIN SUBDIVISION, PHASE 2, according to the official plat thereof, now of record, in Volume 27, Page 42 of the plat records of Jackson County, Oregon; thence along the East line of said PHASE 2, South 00°11'49" West, 155.128 feet to a 5/8 inch iron pin and the INITIAL POINT OF BEGINNING; thence along said East line, North 00°11'49" East, 0.50 feet to the Southwest corner of Lot 57 of WHITE MOUNTAIN SUBDIVISION, PHASE 3, according to the official plat thereof, now of record, in Volume 28, Page 6 of the plat records of Jackson County, Oregon;; thence along the South line of said PHASE 3, South 89°47'49" East, 367.11 feet to the North-Northeast corner of that tract set forth in Document No. 2018-030605, Official Records of Jackson County, Oregon; thence along the East line of said tract, South 00°12'00" West, 129.40 feet (record 129.50 feet) to the interior ell corner of said tract; thence along the North line thereof, South 89°46'48" East (record South 89°48' East), 340.00 feet to the West line of Atlantic Avenue; thence along said West line, South 00°12'00" West, 165.04 feet to the East-Southeast corner of that tract set forth in Document No. 2018-029784, said Official Records; thence along the South line thereof, North 89°47'17" West, 436.56 feet to the interior ell corner of said tract; thence along the East line thereof, South 00°15'53" East, 69.00 feet to an angle point; thence South 00°12'00" West, 100.00 feet to the South-Southeast corner of said tract; thence along the South line thereof, North 89°47'17" West, 271.01 feet to the East line of WHITE MOUNTAIN SUBDIVISION, PHASE 1, according to the official plat thereof, now of record, in Volume 26, Page 34 of the plat records of Jackson County, Oregon; thence along the East line of said PHASES 1 & 2, North 00°10'58" East (record North 00°11'49" East), 309.14 feet to the Northwest corner of that tract set forth in Document No. 2018-029784, said Official Records; thence along the East line of said PHASE 2, North 00°11'49" East, 153.79 feet to the initial point of beginning.

REGISTERED PROFESSIONAL LAND SURVEYOR
[signature]
OREGON
JULY 17, 1986
JAMES E. HIBBS
2234
RENEWAL DATE 6-30-21

SURVEY NARRATIVE TO COMPLY WITH O.R.S. 209.250

PURPOSE: TO SURVEY AND MONUMENT THE LOTS AND STREETS OF MCALISTER MEADOWS, A SUBDIVISION OF THOSE TRACTS SET FORTH IN DOC. 2018-029784 & 2018-030605, ORJCO. SEE JCDS 439-18-00065-SUB.

PROCEDURE: FROM CONTROL AND MONUMENTS FOUND OR SET BY THIS OFFICE DURING FS22369 AND USING TRIMBLE R8 G.P.S. RECEIVERS, MADE TIES TO THE N.W. CORNER OF LOT 57, WMS3 AS SHOWN ON SHEET 2 TO CONTROL THE EXTERIOR OF THE SUBJECT PROPERTIES. THE S.W. CORNER OF LOT 57, WMS3 WAS POSITIONED USING PLAT RECORD DATA AS SHOWN ON SHEET 2. COMPUTED THE LOT & STREET R/W POSITIONS PER THE APPROVED TENTATIVE PLAT AND SET MONUMENTS AT THE LOCATIONS AS SHOWN ON SHEET 2.

APPROVED BY A MAJORITY FOR RECORDING.

Colleen Roberts
COUNTY COMMISSIONER/ADMINISTRATOR

2/13/2020
DATE

FILED
Date 2/13/2020 By PB
This Survey Consists Of:
2 sheet(s) Map
0 page(s) Narrative
JACKSON COUNTY SURVEYOR

SHEET 1 OF 2

17131FM

23009
174/50

23009

SURVEY FOR:

MARK MCALISTER
5966 DARK HOLLOW RD.
MEDFORD, OR 97501

DATE:

JANUARY 18, 2020

SURVEY BY:

L.J. FRIAR & ASSOCIATES, P.C.
CONSULTING LAND SURVEYORS
PO BOX 1947
PHOENIX, OR 97535
PHONE: (541) 772-2782
LJFRIARANDASSOCIATES@CHARTER.NET
WWW.LJFRIARANDASSOCIATES.COM

MCALISTER MEADOWS

A Subdivision located in the N.E. 1/4 of Sec. 21, T.36S., R.1W., W.M. White City Jackson County, Oregon (File No. 439-18-00065-SUB)

COURSE DATA TABLE

NUM	DELTA	ARC	RADIUS	CHORD	
C1	89°58'48"	47.11	30.00	N44°47'24"W	42.42
C2	18°11'42"	38.90	122.50	S80°40'57"E	38.74
C3	18°11'42"	24.61	77.50	N80°40'57"W	24.51
C4	18°11'42"	31.76	100.00	S80°40'57"E	31.62
C5	18°11'42"	31.76	100.00	N80°40'57"W	31.62
C6	90°02'14"	66.79	42.50	S45°12'05"W	60.12
C7	90°02'14"	31.43	20.00	S45°12'05"W	28.29
C8	89°58'14"	66.74	42.50	S44°48'09"E	60.09
C9	89°58'14"	31.41	20.00	S44°48'09"E	28.28

NUM	BEARING	DISTANCE
L1	S25°41'06"E	24.44
L2	N71°35'06"W	32.03

Encumbrances per First American Title Company Public Records Report 7169-3372581 dated 12-30-2019

EASEMENT FOR CANAL & DITCHES PER VOL. 325, PG. 83, JCDR. (SPECIFIC LOCATION NOT GIVEN)

COVENANTS, CONDITIONS, RESTRICTIONS AND/OR EASEMENTS PER DOC. 70-05944 & 71-02235, ORJCO. (BLANKET)

EASEMENT FOR ELECTRICAL FACILITIES PER DOC. 81-07782, ORJCO. (SPECIFIC LOCATION NOT GIVEN)

DRIVEWAY EASEMENT PER DOC.98- 04549, ORJCO. DOES NOT LIE WITHIN SUBJECT PROPERTY.

RESTRICTIVE COVENANTS PER DOC. 2008-034757 & 2019-026965, ORJCO. (BLANKET)

LEGEND:

- ● = FD. 5/8" IRON PIN & PLASTIC CAP MKD. KAISER RLS803 PER WMS3.
- = FD. 5/8" IRON PIN PER FS1868.
- = FD. 5/8" IRON PIN & PLASTIC CAP MKD. L.J. FRIAR & ASSOC. PER FS22639.
- = SET 5/8" X 30" IRON PIN & PLASTIC CAP MKD. L.J. FRIAR & ASSOC.
- ○ = SET 5/8" X 24" IRON PIN & PLASTIC CAP MKD. L.J. FRIAR & ASSOC.
- ◎ = SET 5/8" X 30" IRON PIN & ALUMINUM CAP MKD. L.J. FRIAR & ASSOC.
- = SET 1.25" COPPER PLUG MKD. L.J. FRIAR & ASSOC. IN CONCRETE.
- = SET 2" BRASS WASHER MKD. L.J. FRIAR & ASSOC. & MAG SPIKE IN AC.

ORJCO = OFFICIAL RECORDS OF JACKSON COUNTY, OREGON.
FS = FILED SURVEY #.
-X- = FENCE LINE.
C1/L1 = SEE COURSE DATA TABLE.
TTE = TEMPORARY VEHICULAR TURN AROUND EASEMENT PER THIS PLAT.
JCDR = JACKSON COUNTY DEED RECORDS.
PUE = PUBLIC UTILITY EASEMENT PER THIS PLAT.
WMS3 = WHITE MOUNTAIN SUBDIVISION, PHASE 3 (FS17197).
SF = SQUARE FEET.
WMS1 = WHITE MOUNTAIN SUBDIVISION, PHASE 1 (FS16649).
WMS2 = WHITE MOUNTAIN SUBDIVISION, PHASE 2 (FS17017).
PSDE1 = PRIVATE STORM DRAIN EASEMENT PER WMS1.
PSDE2 = PRIVATE STORM DRAIN EASEMENT PER WMS2.
1SP = ONE FOOT STREET PLUG PER THIS PLAT.
SDE1 = PUBLIC STORM DRAIN EASEMENT PER WMS1.
RVSS = PUBLIC SANITARY SEWER EASEMENT PER DOC. 2019-016726, ORJCO.
PRE = PRIVATE ROAD & UTILITY EASEMENT FOR LOTS 17 & 18 PER THIS PLAT.
PSDE = PRIVATE STORM DRAIN EASEMENT PER THIS PLAT.
SDE = PUBLIC STORM DRAIN EASEMENT PER DOC. 2019-019557, ORJCO.
PI = POINT OF CENTERLINE INTERSECTION.
( ) = DEED RECORD DATA.
RM = REFERENCE MONUMENT.
1WC = 1.00 FOOT WITNESS CORNER MONUMENT.
0.50WC = 0.50 FOOT WITNESS CORNER MONUMENT.
2WC = 2.00 FOOT WITNESS CORNER MONUMENT.
[ ] = RECORD DATA PER WMS3.

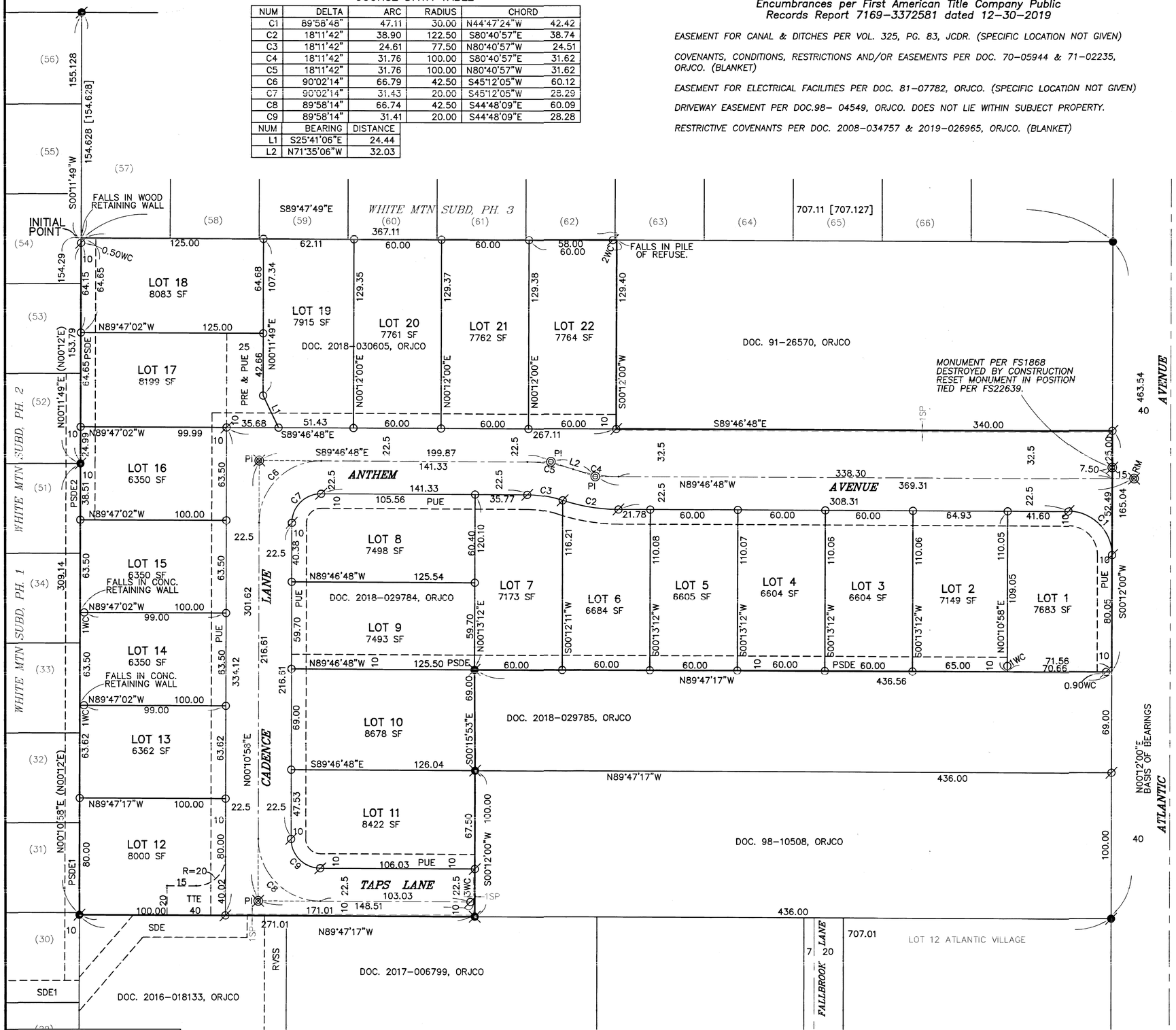

BASIS OF BEARINGS:

SURVEY NO. 22639 AS SHOWN HEREON.

UNIT OF MEASUREMENT = FEET SCALE: 1" = 50'

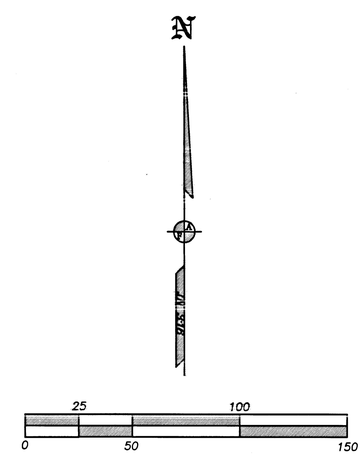

I HEREBY DECLARE THAT THIS IS AN EXACT COPY OF THE ORIGINAL PLAT.

JAMES E. HIBBS, PLS2234

REGISTERED PROFESSIONAL LAND SURVEYOR
OREGON
JULY 17, 1986
JAMES E. HIBBS
2234
RENEWAL DATE 6-30-21

FILED
Date 2/13/2020 By PB
This Survey Consists Of:
2 sheet(s) Map
0 page(s) Narrative
JACKSON COUNTY SURVEYOR

SHEET 2 OF 2

361W21AA TL'S 2600 & 2700

THIS PLAT WAS PREPARED USING AN EPSON SC-T5200 WITH EPSON T6925 INK ON CONTINENTAL JPC4M2 POLYESTER FILM.

17131FM

23009
174/50